SMU | TEMERLIN ADVERTISING INSTITUTE

TEMERLIN ADVERTISING INSTITUTE ON-SITE APPLICATION – SUMMER 2013

Want to major or minor in advertising?
The Temerlin Advertising Institute (TAI) on-site application will be offered once during the Summer 2013 term for qualified SMU undergraduate students who wish to major or minor in advertising. The session will be held on **Thursday, June 27 from 2:00 - 4:00pm in Fondren Library West, Rooms 103B & 103C**.

To register, email temerlin@smu.edu by 5:00pm on Wednesday, June 26. Be sure to include the following information in the email:

- First and last name
- SMU ID number
- SMU email address
- Cell phone number
- Total number of hours you will have completed by the *end* of the summer

Qualified to apply? If you can answer YES! to the following questions, you're qualified to sit for the on-site application in June:

- I have completed **OR** will complete the four (4) subset courses (ADV 2374; ENGL 1301 or DISC 1312*; ENGL 1302 or DISC 1313*; STAT 1301 or STAT 2301 or STAT 2331) by the end of Summer 2013, and have a combined GPA of 3.0 or better in these courses.
- I entered SMU during or after the 2008 – 2009 academic year and have completed a minimum of 30 hours **OR** I entered SMU before the 2008 – 2009 academic year and have completed a minimum of 24 hours.
- I have a cumulative SMU GPA of 2.5 or better and am in good standing with the university.

For more information regarding the TAI admissions requirements and process, click here. **Please note that you will not be permitted to take restricted Advertising courses or declare a major or minor in Advertising unless you have sat for this application and are admitted to the Temerlin Advertising Institute.**

What to bring? A hard copy of your most current Degree Progress Report (DPR) and a valid SMU ID card.

How to prepare? We know that you have finished ADV 2374: Survey of Advertising, or are taking it now, which is all the preparation you need. The short essays on the application are your opportunity to communicate the theories and ideas you have learned through this course.

Questions about the application process or Advertising degree plans? Contact the TAI office by email (temerlin@smu.edu) or by phone (214.768.3090). The TAI office is located in 202 Umphrey Lee Center, and is open Monday - Friday from 8:30am - 5:00pm.

**Or approved University Honors Program substitutes: DISC 2305 and DISC 2306.*

SMU | Temerlin Advertising Institute

Directions and a Map to Fondren Library West (FLW) 103B & 103C

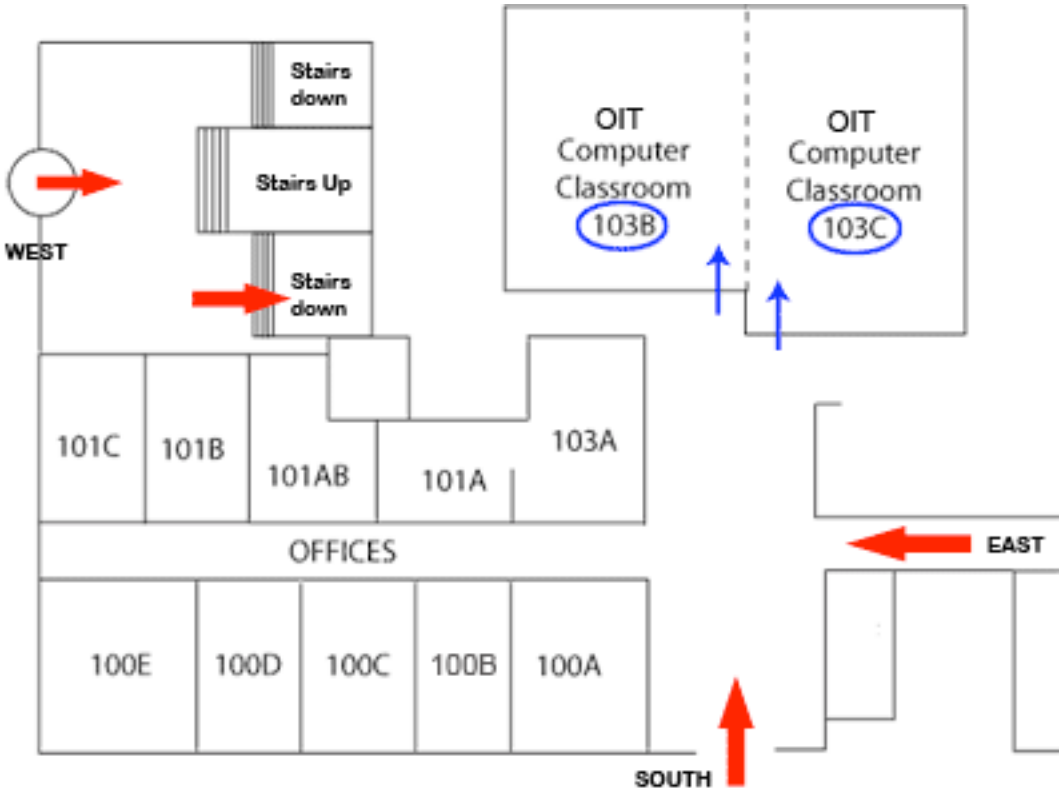

Entering Fondren Library West from the south (across from Hughes-Trigg): come in the south entrance, the classrooms are straight ahead.

Entering Fondren Library West through the revolving door on the west side: go down a half flight of steps to the first floor. The computer classrooms are on the left as you walk east, down the hall.

Entering Fondren Library West from the east: from the first floor of Fondren Library East, go west through the corridor. Turn right (north) when you reach the lobby of Fondren Library West, the computer classrooms are straight ahead.